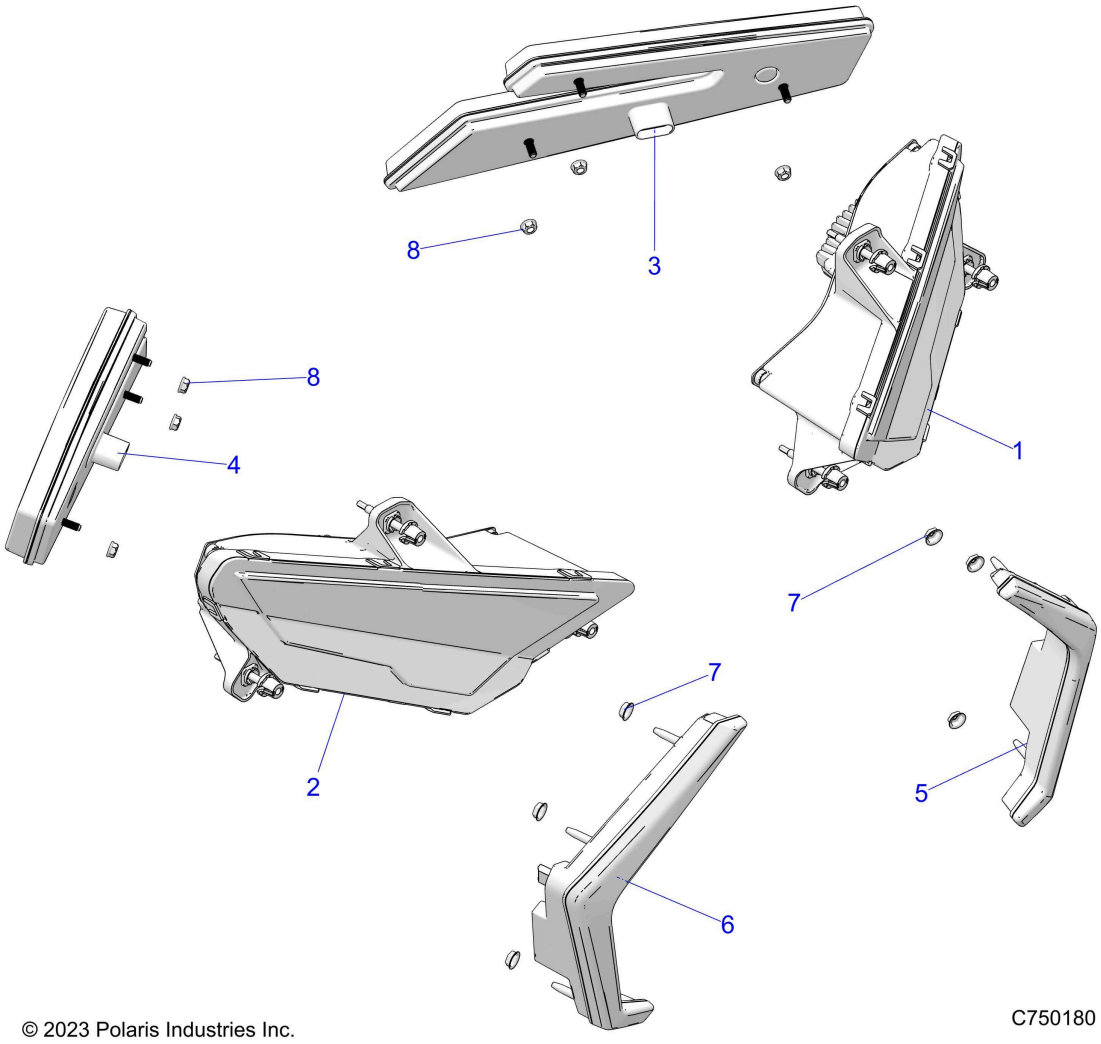

© 2023 Polaris Industries Inc.

Reference #	*Part#*	*Description*	*Quantity*
1	2418037	ASM-HEADLIGHT,LED,ANIMATED,LH	1
2	2418038	ASM-HEADLIGHT,LED,ANIMATED,RH	1
3	2415177	ASM-TAILIGHT,LED,LOWER,LH	1
4	2415178	ASM-TAILIGHT,LED,LOWER,RH	1
5	2417278	ASM-LIGHT,ACCENT,LH	1
6	2417279	ASM-LIGHT,ACCENT,RH	1
7	7670054	SPEED NUT-WASHER, HEAD-1/4	6
8	7547270	NUT-HXFLGHD, M6, SERRATED	6

Copyright 1996-2026 Polaris Industries U.S.A All rights reserved.